Trade of Sheet Metalwork	
Module 4:	**General Sheet Metalwork**
Unit 13:	**Off-Centre Rectangle to Round**
	Phase 2

Table of Contents

List of Figures **4**

List of Tables **5**

Document Release History **6**

Module 4 – General Sheet Metalwork **7**

Unit 13 – Off-Centre Rectangle to Round 7
Learning Outcome: 7
Key Learning Points: 7
Training Resources: 7
Key Learning Points Code: 7

Self Assessment **9**

Answers to Questions 1-4. Module 4.Unit 13 ..... **11**

Index **13**

List of Figures

Figure 1 - Off-Centre Rectangle to Round 8

List of Tables

Document Release History

Date	Version	Comments
21/11/06	First draft	
09/04/14	2.0	SOLAS transfer

Module 4 – General Sheet Metalwork

Unit 13 – Off-Centre Rectangle to Round

Duration – 10.5 Hours

Learning Outcome:

By the end of this unit each apprentice will be able to:

- Organise the production sequence
- Construct and fabricate an off-centre rectangle to round
- Calculate material requirements for pattern development
- Assemble and fit a kit form flange to transformer
- Identify different developed pattern shapes

Key Learning Points:

D	Drawing and development of an off-centre rectangle to round.
Sk	Shaping and forming of transformers left and right sides.

Training Resources:

- Toolkit
- Propriety flanging
- Safety equipment and protective clothing
- Tools and machinery/equipment
- 0.6mm galvanised mild steel
- Notepad
- Job card

Key Learning Points Code:

M = Maths D= Drawing RK = Related Knowledge Sc = Science
P = Personal Skills Sk = Skill H = Hazards

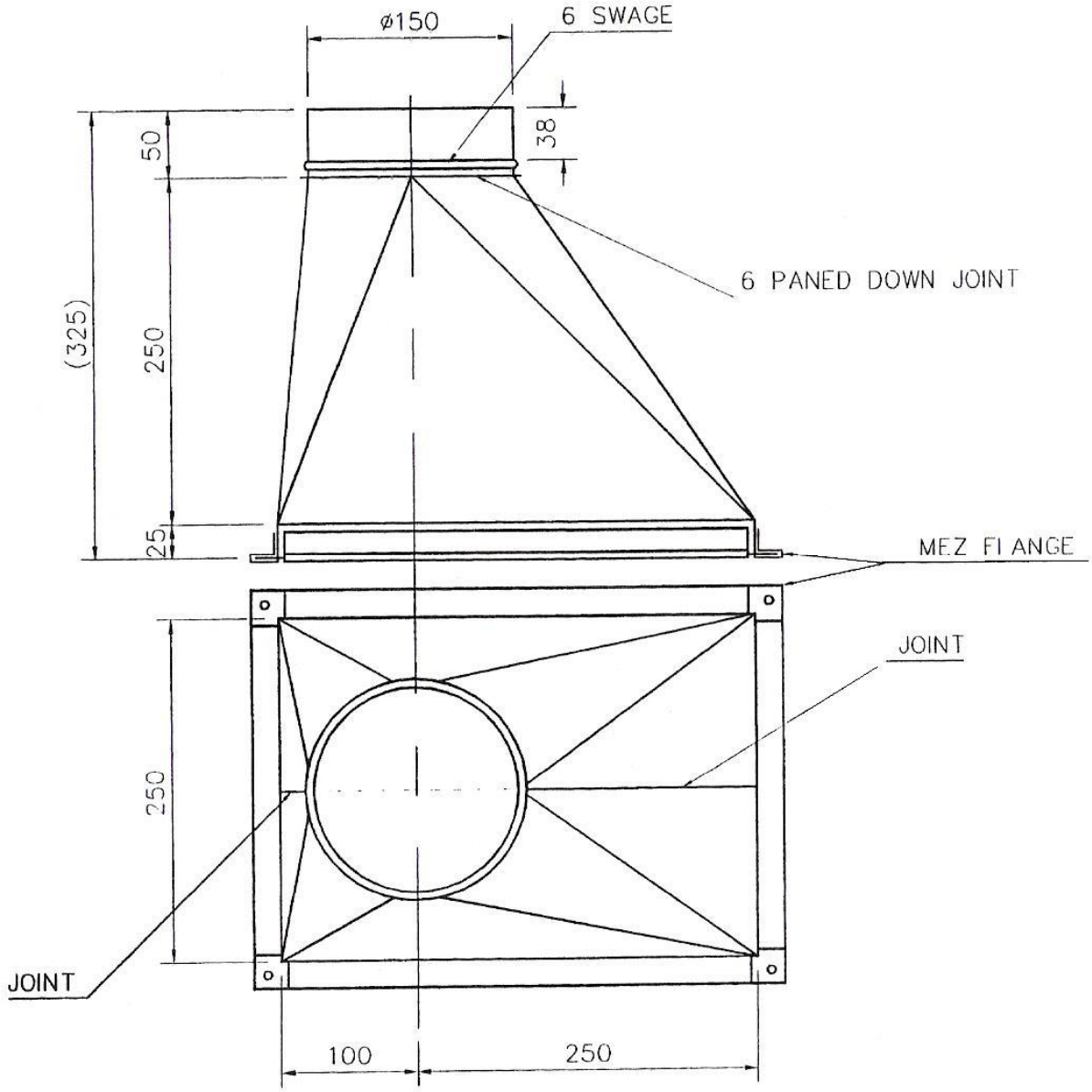

Figure 1 - Off-Centre Rectangle to Round

Self Assessment

Questions on Background Notes – Module 4.Unit 13

1. What is the "Golden Rule" of triangulation?

2. What is the area of the round pipe?

3. What is the circumference of the pipe?

4. What is the area of the rectangular end?

Answers to Questions 1-4. Module 4.Unit 13

1.

Plan length against the vertical height of the job: We place the plan length at 90° to the vertical height and measure, the resulting diagonal is the true length.

2.

The formula for area is πR^2

$$3.142 \times 75 \times 75 = 17673.75mm^2$$

3.

Formula for circumference is $2\pi R$ or πD

$$2 \times 3.142 \times 75 = 477.3mm$$

or

$$150 \times 3.142 = 477.3mm$$

4.

Area of rectangle is L x B

250mm x 350mm = 87500mm²

Index

S

Self Assessment, 9